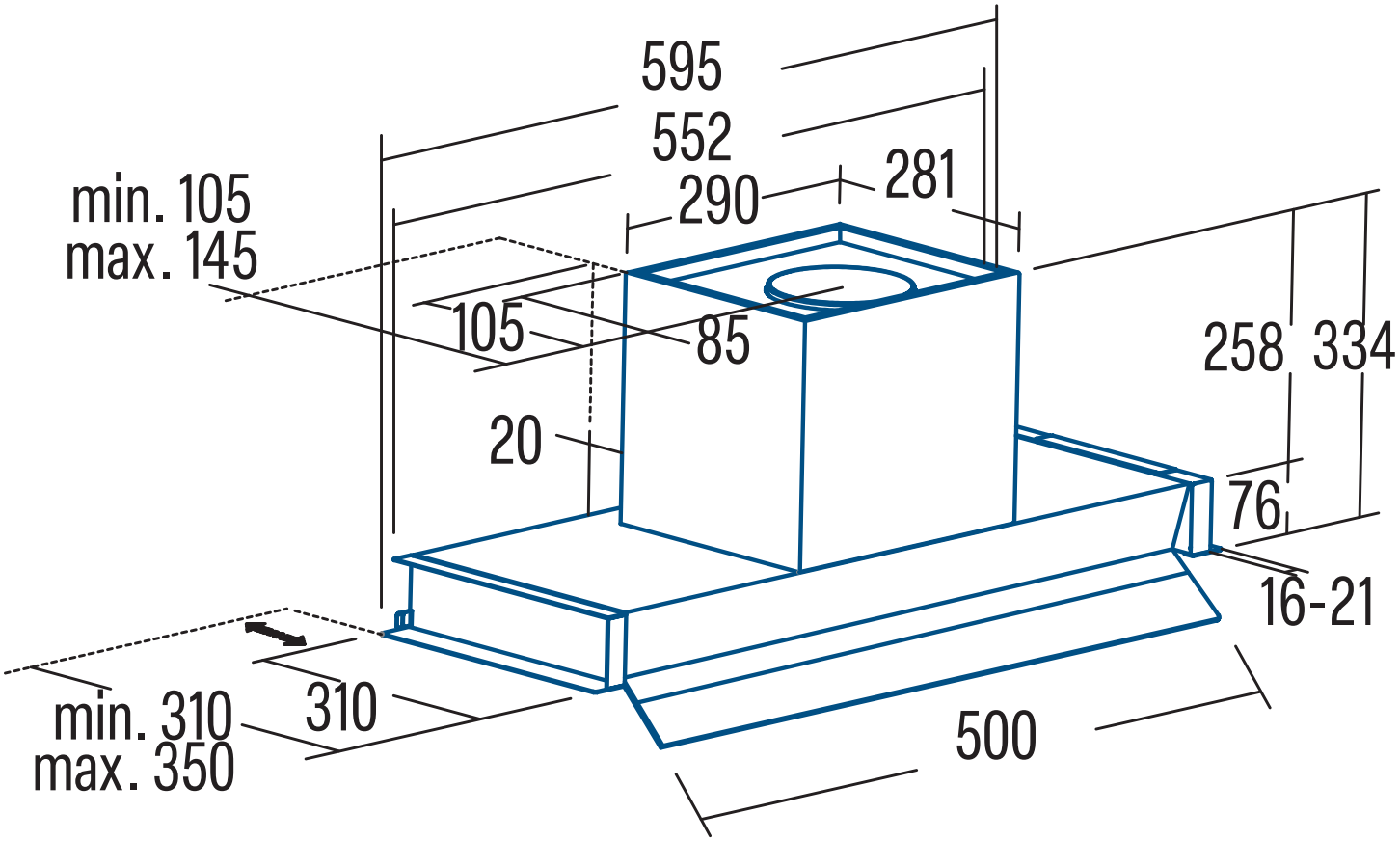cata
green innovation