CHORUS XGX
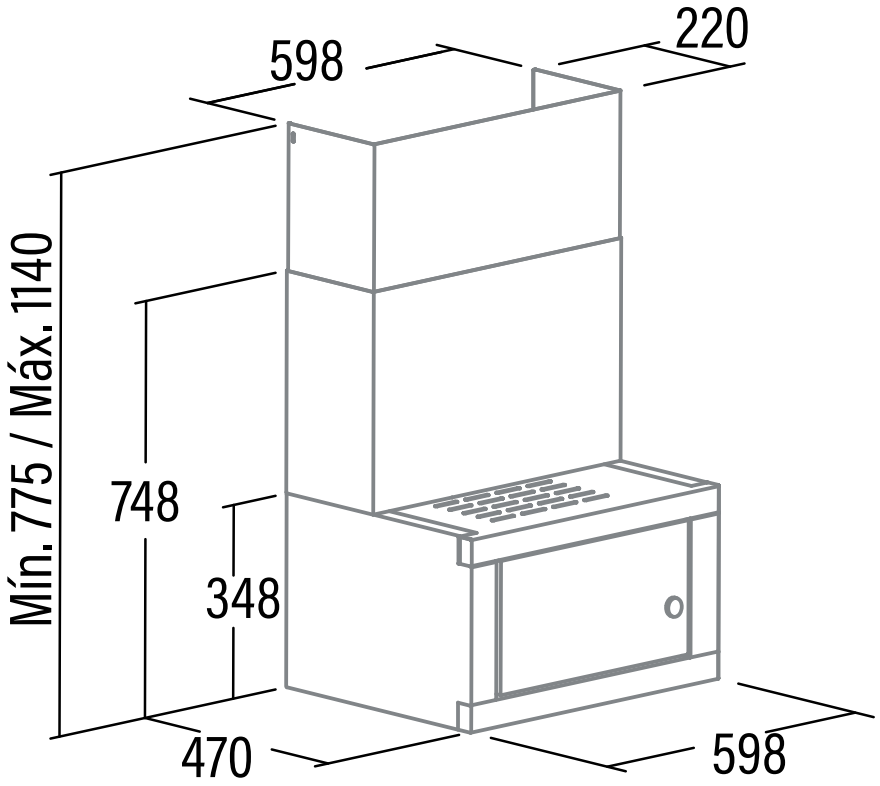
Cod.: **02165202** EAN: **8422248070492**