CORONA X 60
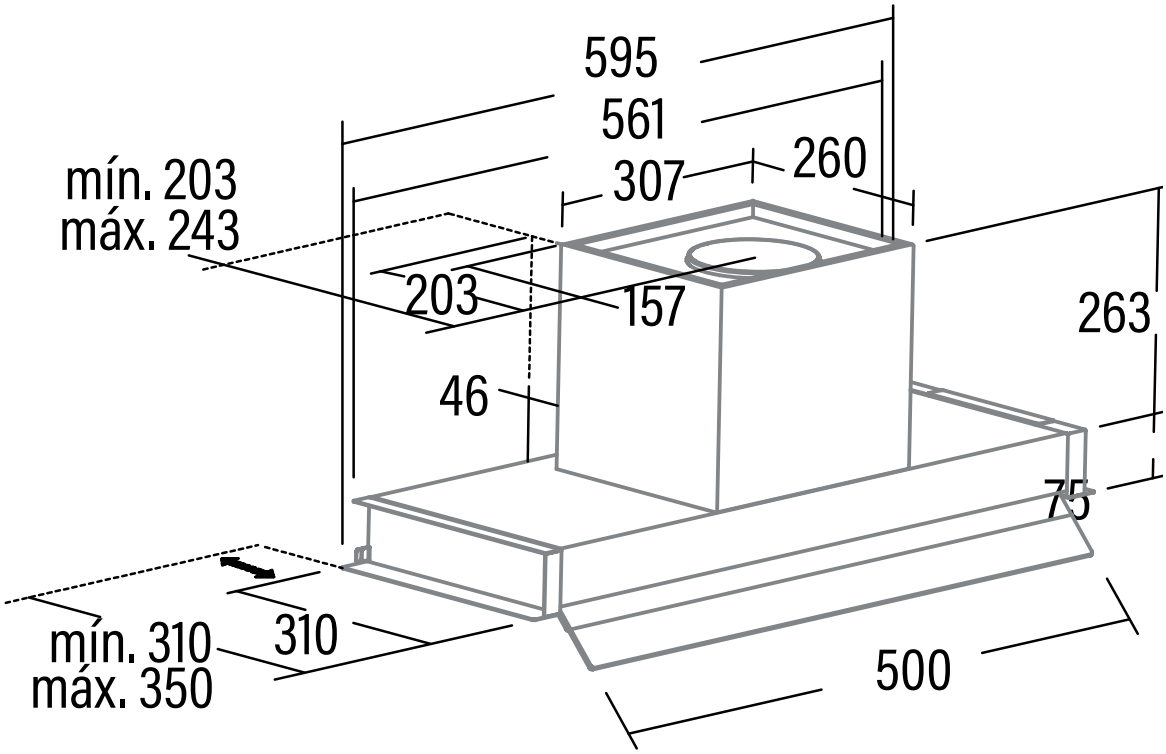
Cod.: **02186205** EAN: **8422248084314**