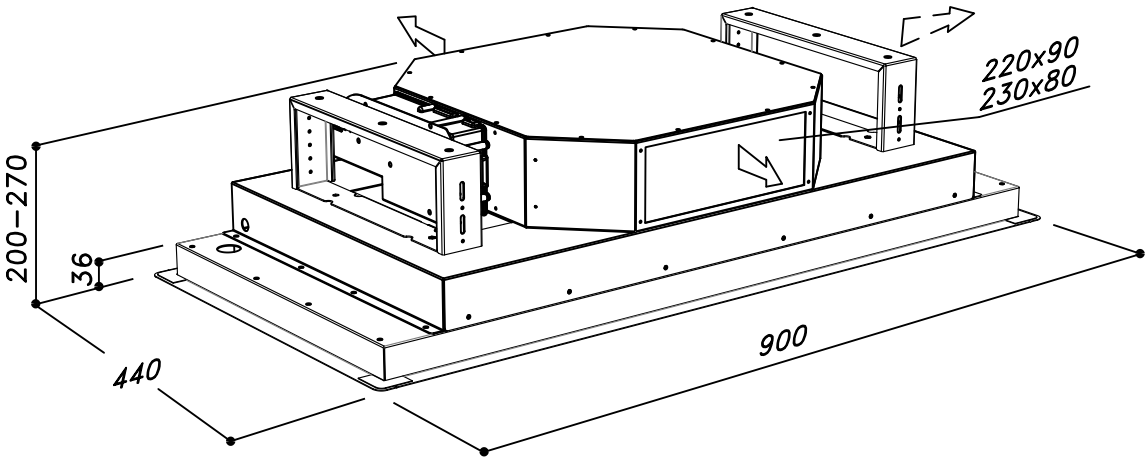
220x90
230x80
200–270
36
440
900