CB 40-40 R10
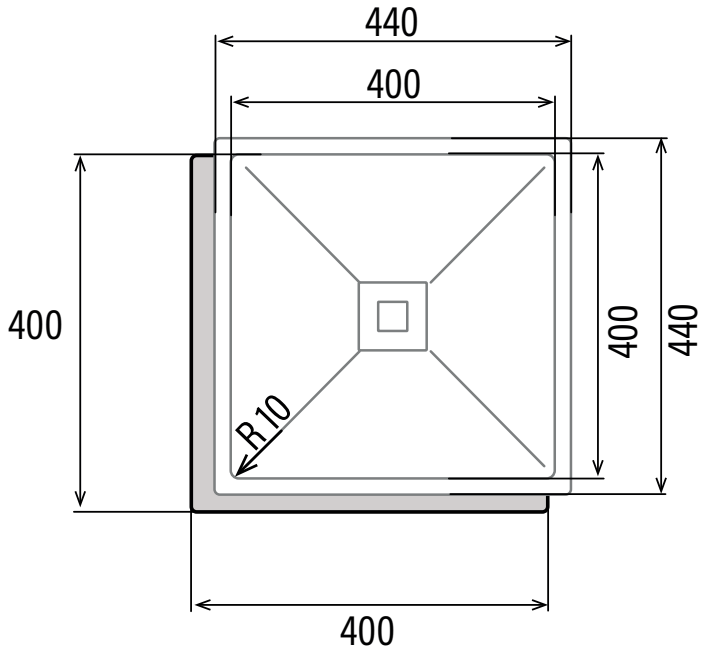
Cod.: **02624016** EAN: **8422248108638**